LANmark Industry

Industrial Cabling

Nexans

Technical Paper

Nexans Cabling Solutions

July 2005

Industrial cabling

Version: June 2005

CONTENT

1. Foreword

2. Applicable standards
- 2.1 Cabling standards
- 2.2 Components standards
- 2.3 Installation guidelines

3. Generic topologies

4. Industrial premises versus Commercial premises
- 4.1 Environmental requirements
- 4.2 Cables
- 4.3 Connectors
  - 4.3.1 Copper connectors
  - 4.3.2 Optical connectors
  - 4.3.3 Encapsulation
  - 4.3.4 IP Rating

5. Transmission performances and Applications
- 5.1 Channel transmission performances
- 5.2 Applications

6. Installation and measurements

7. LANmark *Industry* system approach

8. Petrochemical plants and other specific industries

Edition June 2005 – Copyright Nexans 2005
Subject to change without prior notice

1 Foreword

Ethernet has established itself as the dominant transmission technology for LANs. Despite technologically superior technologies such as ATM (Asynchronous Transfer Mode), Ethernet holds its leading position because of its low cost, its versatility and easiness of implementation.

The automation networking industry is dominated by bus systems. These bus systems are many, incompatible with each other and operating at relatively slow speeds.

The Automation industry has identified Ethernet as a way to increase data transmission speeds and support the integration of IT (Information Technology) and automation systems. Implementing Ethernet in production premises and for automation purposes has driven to the redefinition of the cabling infrastructure in production premises and the improvements of some intrinsic weaknesses of the Ethernet technology. These processes are currently going on.

NCS is addressing the challenges proposed by the implementation of cabling systems within industrial premises. The **LANmark *Industry*** cabling systems is built according to the appropriate standards and accommodates transmission needs and environmental requirements of IT and Automation.

This technical paper covers the most significant technical issues related to industrial cabling.

2. Applicable standards

2.1 Cabling standards

- Draft ISO/IEC 24702 *Information technology – Generic cabling – Industrial premises*

This standard is still in a draft version. It defines the architecture, the transmission performances and the environmental requirements for a universal, application independent structured cabling within industrial premises. It is strongly inspired from the ISO/IEC11801 (2002). The present technical paper mainly refers to this Draft ISO/IEC 24702.

- Draft EN 50173-3 *Generic cabling systems - Industrial premises*

This is the European equivalent of the international standard mentioned above.

2.2 Components standards

- IEC61076-3-106

This standard defines the protective and locking housing (encapsulation) of the connectors that shall enable operation in industrial premises. (Protection against liquids, objects and dust ingression, EMC etc.)

The mechanical and electrical performances of the connectors are the ones defined in ISO/IEC 11801 Ed.2. The RJ45 is the specified connector for industrial copper cabling.

2.3 Installation guidelines

The draft ISO/IEC 24702 mainly refers to the requirements of the ISO/IEC 11801 for the implementation of a generic cabling. Specific environmental conditions are of course the ones of the ISO/IEC 24702. The mechanical characteristics of the connecting hardware are the ones referred in the IEC61076-3-106 and IEC61918.

- IEC 61918 *Digital data communications for measurement and control – Profiles covering installation practice for fieldbus communications media within and between the Automation Island*

This international standard intends to be an installation guideline enabling different communication systems (*for distributed monitoring and control of automation applications*) that use both fieldbuses and Ethernet to be complete and homogeneous.
It has been realised in cooperation with the ISO/IEC24702. The TO (Telecom Outlet) is known as the AO (Automation Outlet). The device connected to the

network is not a single PC but a whole group of automated devices (known as an Automation Island). 3 connectors' formats are recognised. *See table 4.3.3.*

- PROFInet

Profibus is an international organisation, which has developed an open platform for automation. It is the world's leading organization in the field of digital networking for industrial and process automation. The Profibus Users group PNO (PROFIBUS Nutzerorganisation e. V.) is a non-profit organization with its headquarter in Karlsruhe, Germany. They are working on defining and maintaining the open and vendor independent PROFIBUS and PROFINET technology. Profinet is their Ethernet based automation standard.

Profibus have issued their "Installation Guideline PROFInet". It can be seen as a supplement to the ISO11801 for the deployment of cabling within industrial premises. It is application dependant: designed for profinet.

- IAONA *Industrial Automation Open Networking Alliance*

The IAONA is an independent platform organisation supporting development of industrial Ethernet. Its members are users and manufacturers of automations systems. Its task is to develop open communication standards. It issues guidelines for the deployment and spread of Ethernet in the industry.

Their "Industrial Ethernet Planning and Installation Guide" (Version 4.0) give guideline on the planning and installation of an industrial cabling. There are many similarities with EN24702.

Document	Comments	Relevance
ISO/IEC 24702	Standard of reference	++++
IEC 61076-3-106	Standard of reference	++
IEC 61918	Installation guideline	+++
Profinet	Installation guideline	++
IAONA	Installation guideline	++

3. Generic topologies

The specified architecture generally follows the guidelines given in ISO/IEC11801 Ed.2. However the draft ISO/IEC 24702 specifies extra elements that accommodate better the cabling in industrial premises.

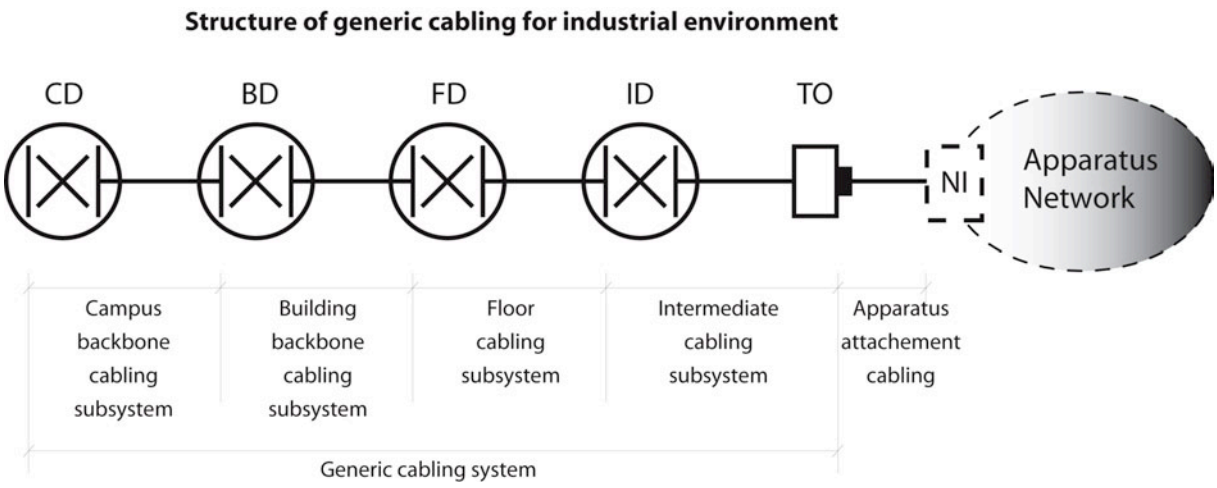

It also explicitly supports extended distances as illustrated below.

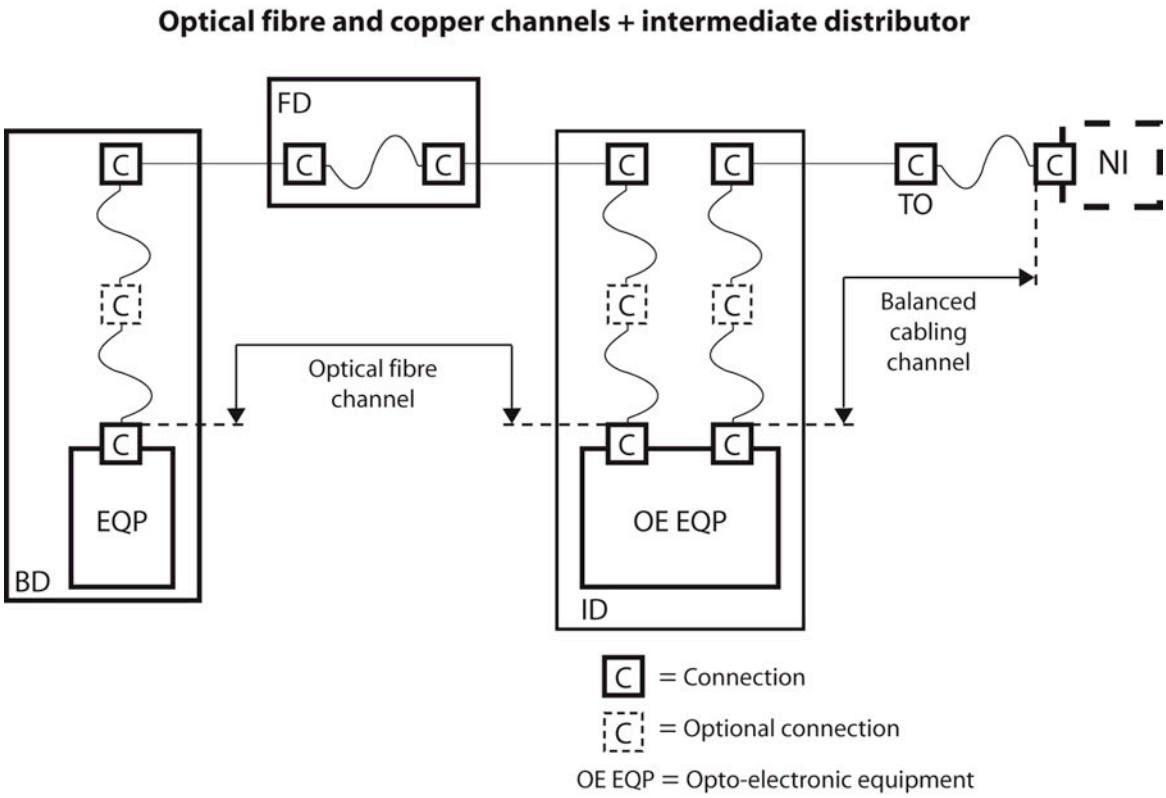

Bulkheads or "back to back" connections are supported as well. These could be used as intermediate distributors. It is a wall connection maintaining environmental segregation on either side. This could be seen as a "machine to machine" connection

using balanced cabling. Specific rules apply for these configurations i.e. calculation of the maximum cable length since flexible cable is used "instead" of horizontal cable.

Channel configuration with a bulkhead

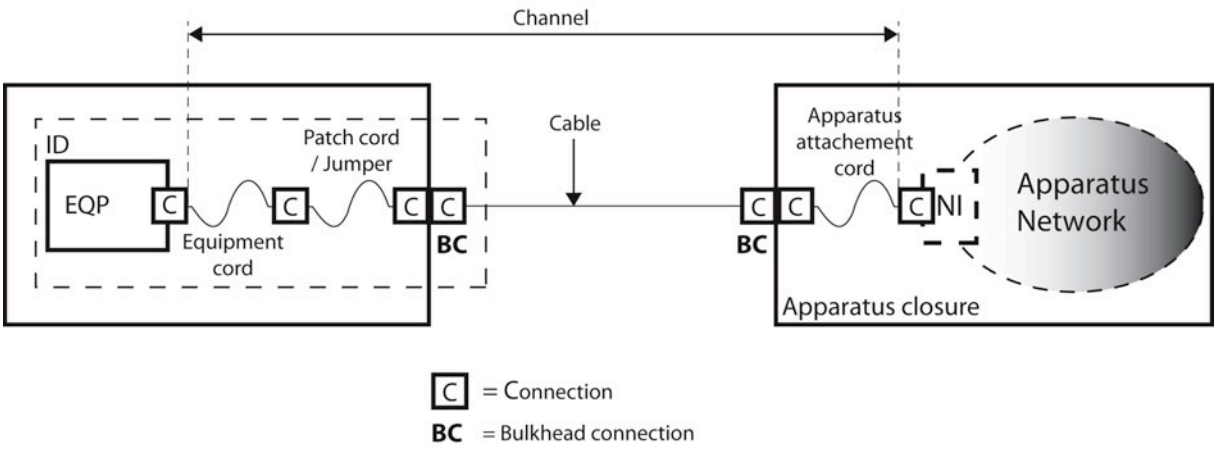

4. Industrial premises versus Commercial premises

4.1 Environmental requirements

One of the critical differences between industrial and the commercial cabling is obviously the environmental conditions under which the cabling will operate. In industrial premises the cabling is expected to be subject to liquids, chemical, vibrations etc. Using the right components will be decisive to the transmission performances and transmission reliability expected from the cabling.

The standard is giving guidelines on how to address these environmental conditions. Three generic classes of environments have been defined.

- **Standard environment (**Office environment**)**
- **Light industrial environment**
- **Heavy industrial environment**

Criteria characterising these environments have been classified in 4 groups: **M**echanical, **I**ngress, **C**limatic, and **E**lectromagnetic (**M.I.C.E.**). Minimum performances for these groups have been set for each environmental class: lower requirement in a standard environment, very high requirements for a heavy industrial environment.

This has been summarised in the **MICE table**.

	Standard environment	**Light industrial**	**Heavy industrial**
Mechanical	**M_1**	**M_2**	**M_3**
Shock/bump (Peak acceleration)	40 ms^{-2}	100 ms^{-2}	250 ms^{-2}
Vibration			
Displacement amplitude (2-9 Hz)	1,5 mm	7,0 mm	15,0 mm
Acceleration amplitude (9-500Hz)	5 ms^{-2}	20 ms^{-2}	50 ms^{-2}
Tensile force	See Note 1	See Note 1	See Note 1
Crush	45N over 25mm (linear) min.	1100N over 150mm (linear) min.	2200N over 150mm (linear) min.
Impact	1 J	10 J	30 J
Bending and flexing	See Note 1	See Note 1	See Note 1
Ingress	**I_1**	**I_2**	**I_3**
Particulate ingress (Ø max.)	12,5 mm	50μm	50μm
Immersion	None	≤ 12,5l/min ≥ 6,3 mm jet > 2,5 m distance	≤ 12,5l/min ≥ 6,3 mm jet > 2,5 m distance and immersion (≤ 1m for ≤30 min)
Climatic	**C_1**	**C_2**	**C_3**
Ambient temperature	-10°C to +60°C	-25°C to +70°C	-40°C to +70°C
Rate of change of temperature	0,1°C per minute	1,0°C per minute	3,0°C per minute
Humidity	5% to 85% (non-condensing)	5% to 95% (condensing)	5% to 95% (condensing)
Solar radiation	700 Wm^{-2}	1120 Wm^{-2}	1120 Wm^{-2}

Liquid Pollution Contaminants			
Sodium chloride (salt/sea water) (ppm)	0	<0,3	<0,3
Oil (ppm)	0	<0,5	<0,5
Sodium stearate (soap)	None	5% aqueous non-gelling	>5% aqueous gelling
Detergent	None	ffs	ffs
Conductive materials in solution	None	Temporary (condensation)	Present
Gaseous pollution Contaminants (cm^3m^{-3}=ppm)	**Mean/Peak**	**Mean/Peak**	**Mean/Peak**
Hydrogen sulphide	<0,003 / <0,01	<0,05 / <0,5	<10 / <50
Sulphur dioxide	<0,01 / <0,03	<0,1 / <0,3	<5 / <15
Sulphur trioxide (ffs)	<0,01 / <0,03	<0,1 / <0,3	<5 / <15
Chlorine wet (>50% humidity)	<0,0005 / <0,001	<0,005 / <0,03	<0,05 / <0,3
Chlorine dry (<50% humidity)	<0,002 / <0,01	<0,02 / <0,1	<0,2 / <1,0
Hydrogen chloride	- / <0,06	<0,06 / <0,3	<0,6 / <3,0
Hydrogen fluoride	<0,001 / <0,005	<0,01 / <0,05	<0,1 / <1,0
Ammonia	<1 / <5	<10 / <50	<50 / <250
Oxides of Nitrogen	<0,05 / <0,1	<0,5 / <1	<5 / <10
Ozone	<0,002 / <0,005	<0,025 / <0,05	<0,1 / <1
Electromagnetic	**E_1**	**E_2**	**E_3**
Electrostatic discharge – Contact (0,667μC)	4kV	4kV	4kV
Electrostatic discharge – Air (0,132C)	8kV	8kV	8kV
Radiated RF – AM	3V/m @ 80-2000MHz 1V/m @ 2000-2700MHz	3V/m @ 80-2000MHz 1V/m @ 2000-2700MHz	10V/m @ 80-1000MHz 3V/m @ 1400-2000MHz 1V/m @ 2000-2700MHz
Conducted RF	3V @ 150kHz-80MHz	3V @ 150kHz-80MHz	10V @ 150kHz-80MHz
EFT/B			
AC	500 V	1000 V	2000 V
Surge (transient ground potential difference)			
Signal, line to earth	500 V	1000 V	2000 V
Magnetic Field (50/60 Hz)	1 Am^{-1}	3 Am^{-1}	30 Am^{-1}
Magnetic Field (60-20000 Hz)	ffs	ffs	ffs

ffs: for further studies
Bump: the repetitive nature of the shock experienced by the channel shall be taken into account
Note 1: This aspect of environmental classification is installation-specific and should be considered in association with IEC61918 (in preparation)

A link can be subject to several environmental classes: Standard environment on the cabinet side and heavy industrial on the outlet side.

The standard underlines that specific environments such as petrochemical plants … are out of theses classes and shall be regarded individually.

4.2 Cables

In order to meet the environmental requirements of the MICE table specific materials must be used. The standard LSZH compound used in commercial premises is fully sufficient for the standard class but wouldn't withstand the condition of the light and heavy industrial classes. The following table summarizes the differences between the material and their applications.

	PUR Polyurethane	**PE Polyethylene**	**LSZH Low Smoke Zero Halogen Polyolefin**	**PVC Polyvinylchloride**
Abrasion	Very good		Poor	Good
Tensile strength MPa	35	30	-	20
Elongation %	600	800	-	250
Tear strength	Very high	High	Low	High
UV Resistance	Good	Very good	Medium	Very good
Oil resistance	Very good	Good	Low	Good
Chemicals resistance	Very good	Medium	Low	Good
Water absorption % (20°C)	1,5	0,1	High	0,4
Halogen free	Yes	Yes	Yes	No
Recyclable	Yes			
Temperature domain	-40 to +90	-30 to +80	-25 to + 70	-30 to + 90
Application	**Heavy Industrial** Moving equipment	Outside Food industry	**Office environment** Inside commercial buildings	Industrial
Fire performances	Good	Low	Very good	Good

For general information only. *These materials are available in many versions with different characteristics*

4.3 Connectors

4.3.1 Copper connectors

There are two types of copper connectors that can be used for an industrial cabling. The first one is the M12, which is a circular 4-pin connector typically used for automation. It is metallic and robust but shows limited transmission performance and only accommodates 2 pairs. The second connector is the RJ45 as per IEC 60603-7, which the same as the one specified in the ISO/IEC11801.

4.3.2 Optical connectors

Optical connectors are under review.

4.3.3 Encapsulation

These copper and optic connectors (apart from the M12) requires encapsulation as above in order to withstand the industrial environment. The draft IEC61076-3-106 defines these protective housings

Standards have lately moved forward and the connectors chosen by the various standards are listed in the following table. **Nexans has opted for Variant 4** due to its superior mechanical performances and its compliance to significant standards.

Connector types	IEC 24702	IEC 61918	PROFINET	IAONA	Other Org.
M12-4, 4 pole with D-coding IEC61076-2-101-A1	X	X	X	X	ODVA PNO
RJ45-IP67 Circular bayonet locking IEC61076-3-106 Variant 1	X	X		X	ODVA Ethernet IP
Push-pull IEC61076-3-106 Variant 2					
Scraub UNF IEC61076-3-106 Variant 3					
Push-pull IP67 IEC61076-3-106 Variant 4	X	X	X		Profinet PNO
Locking lever coupling IEC61076-3-106 Variant 5					
RJ45-IP67 push-pull locking		X		X	IDA

IEC61076-3-106 Variant 6					Interbus club
Locking lever coupling IEC61076-3-106 Variant 7					
Schraub M22 IEC61076-3-106 Variant 8					
Threaded coupling bayonet locking IEC61076-3-106 Variant 9					
RJ45-IP67 Circular bayonet locking IEC61076-3-106 Variant 10					

4.3.4 IP Rating

The above-mentioned encapsulations are designed to accommodate the copper or optical connectors used for heavy industrial cabling and shall bring the requested IP67 protective level to withstand the environmental conditions.

The IEC 60529 describes the IP rating. It defines the level of protection.

First digit	
Classes for protection against contact and foreign bodies	
0	No protection
1	Protection against large foreign bodies (Ø≥50mm)
2	Protection against foreign bodies (Ø≥12,5mm)
3	Protection against foreign bodies (Ø≥2,5mm)
4	Protection against foreign bodies (Ø≥1mm)
5	Protection against dust
6	Fully dust tight

Please refer to IEC60529 for more details

Second digit	
Classes for protection against liquid ingress	
0	No protection
1	Protected against vertical water drops
2	Protected against vertical drops with a +/- 15° angle from the vertical
3	Protected against spayed water with an angle ≥ 60°
4	Protected against water splashes from all directions
5	Protection against water jets from all directions
6	Protection against strong water jets from all directions
7	Protected from a temporary immersion in water
8	Protected from a long lasting immersion in water

Example of protection for heavy industrial environment: **IP 67**

First digit — **Second digit**

The standards require the following levels of protection:

Environment	Office environment ($Ingress_1$)	Light industrial environment ($Ingress_2$)	Heavy industrial environment ($Ingress_3$)
ISO/IEC 24702	IP20	IP65	IP67
Environment	**Light duty**	**Heavy duty**	
IAONA	IP20	IP67	

Environment	Inside cabinets	Outside cabinets
Profinet	IP20	IP65 – IP67

Please note that the IP rating of a standard office outlet is IP20 and that outlets with an IP44 rating will be used in some areas such as kitchens, garages…

5 Transmission performances and Applications

Transmission performances are similar to the ones specified in the ISO 11801. The ISO/IEC accommodate however POF and therefore includes channels performance specific to POF cabling.

5.1 Channel transmission performances

Copper

- Class A 100Hz
- Class B: 1MHz
- Class C: 16MHz
- Class D: 100MHz
- Class E: 250 MHz
- Class F : 600MHz

However, class D is specified as the minimum performance level for the floor and intermediate cabling. Furthermore the A and B classes are not installed any longer.

Fibre optic

- OF-25
- OF-50
- OF-100
- OF-200
- OF-300
- OF-500
- OF-2000
- OF-5000
- OF-10000

The following wavelengths are specified since both hard silica and plastic optical fibres (POF) , including gradient index POF, are specified: 520nm, 650nm, 850nm, 1300nm, 1550nm.

5.2 Applications

The usual data applications are supported. The Industrial Ethernet applications are based on the Ethernet standard and are therefore fully supported by the cabling. These applications are enhanced versions of the Ethernet with real time signalling capability for example.

Please ensure that your cabling has the transmission performances necessary to support the applications you choose.

Please not the **LANmark *Industry*** solutions are specifically ruggedized systems designed to operate in industrial environments.

Application	**Minimum performance of the infrastructure**	**Recommended infrastructure**	**Comments**
Voice	Class C	LANmark-5 or 6 *Industry*	Voice network can then be used for data
VoIP	Class D	LANmark-5 or 6 *Industry*	The network can then be used for data. Class E is more up to date.
10 Base-T	Class D	LANmark-5 or 6 Industry	
100Base-T	Class D	LANmark-5 or 6 *Industry*	A Class E cabling will enable migration to modern and cost effective applications without problems
1000Base-T	Class D	LANmark-5 or 6 *Industry*	A Class E cabling will enable migration to modern and cost effective applications without problems
1000Base-TX	Class E	LANmark-6 *Industry*	
1000Base-SX	OM1 fibres	LANmark-OF2 *Industry*	An OM2 compliant fibre will not have

			the distance limitations of OM1
1000Base-LX	OM1 fibres	LANmark-OF2 *Industry*	An OM2 compliant fibre will not have the distance limitations of OM1
10 gigabit Ethernet according draft IEEE802.3.AN	500MHz	LANmark-7 *Industry*	The LANmark 7 cabling will fully support the 10 Gigabit Ethernet
10 Gigabit FO	OM3	LANmark-OF 3 *Industry*	The OM3 fibres will support 10 Gbase over 300m @ 850nm
Industrial Ethernet variants	Class D	LANmark-6 *Industry*	The use of S/STP cable is strongly recommended to ensure EMC immunity.
Fieldbuses	Class D	LANmark-6 *Industry*	The use of S/STP cable is strongly recommended to ensure EMC immunity.
155ATM	Class D	LANmark-5 or 6 *Industry*	
622ATM	Class D	LANmark-5 or 6 *Industry*	
1G ATM CB1G	Class E	LANmark- 6 *Industry*	The use of S/STP cable is strongly recommended to ensure EMC immunity

LANmark-7 Industry is specifically appropriate for installation with extended lifetime, high cost of replacement, severe EMC requirements, future proofing, etc.

Note: Mixed solutions i.e. Optical fibre + Copper are supported

6 Installation and measurements

The installation shall be conducted by qualified staff and in conformance to local and international regulations.

The draft ISO/IEC 24702, the PROFInet specification as well as the IAONA specification give guidelines for the installation of data cablings in industrial environment.

Specific attention should be given to safety and EMC regulations.

Measurements

Standard hand held testers can be used to control the electrical performances of a newly installed industrial cabling. Limits specified by the ISO11801 shall be used.

Please ensure that the tester used as the appropriate accuracy

Type of cabling	Accuracy required
Class D	Level II
Class E	Level III
Class F	Level IV

For fibre optic cabling a measurement of attenuation with a power meter is sufficient but an OTDR trace is recommended.

7 LANmark *Industry* System approach

The electrical performance immunity is strongly depending on the environmental immunity of the components. The individual components forming a **LANmark *Industry*** cabling are made with the appropriate compounds and designed to be assembled together. The **LANmark *Industry*** cabling will deliver the advertised electrical and mechanical performances. (Please refer to applicable system datasheets) and brings full compliance to the standards.

LANmark *Industry* cabling system means:

- Appropriate materials i.e. PUR cables.
- Components designed to be mounted together.

- Easy termination, easy installation.

- Advanced electrical performances through advanced design (LANmark).
- Reliable cabling system

- In case of problem, one single point of contact: Nexans Cabling Solutions.
- Worldwide support

- Fibre optic and copper
- Large product range to match your budget and architectures

Please note that your flow of control data or data exchanges will ultimately suffer from poor cabling performances.

8 Petrochemical plants and other specific industries

The LANmark Industrial range includes components made of advanced materials in order to meet the requirements of specific environments. Please contact us for more details.

References

- Draft ISO/IEC 24702
- Draft IEC 61076-3-106
- Draft IEC 61918
- IEC 60529
- ISO/IEC 11801 Ed.2

Nexans

Global expert in cables and cabling systems

Paris
rue Mozart, 4-10
92587 Clichy CEDEX
France
Tel +33 (0)1 56 69 84 00
Fax +33 (0)1 56 69 86 38

Brussels
Alsembergsesteenweg 2, b3
1501 Buizingen
Belgium
Tel +32 (0)2 363 38 00
Fax +32 (0)2 365 09 99

London
Tandy House
Felixstowe Road - Abbey Wood
London SE2 9AA • UK
Tel +44 (0) 20 8557 3456
Fax +44 (0) 20 8557 3535